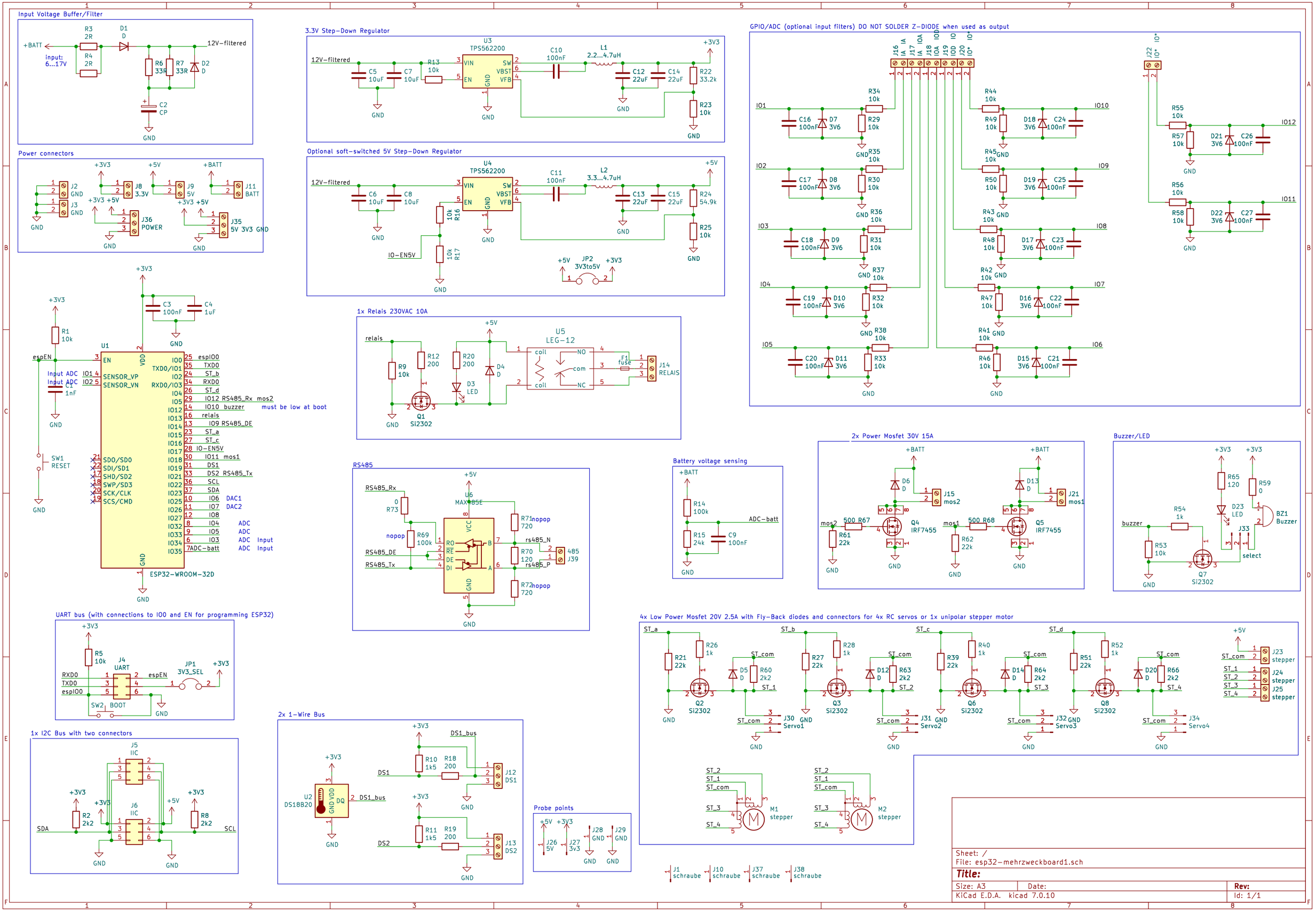
Input Voltage Buffer/Filter
+BATT
input: 6...17V
R3 2R
R4 2R
D1 D
12V-filtered
R6 33R
R7 33R
D2 D
C2 CP
GND
3.3V Step-Down Regulator
U3 TPS562200
12V-filtered
C5 10uF
C7 10uF
R13 10k
VIN
EN
SW
VBST
VFB
C10 100nF
L1 2.2...4.7uH
C12 22uF
C14 22uF
R22 33.2k
R23 10k
+3V3
Power connectors
J2 GND
J3 GND
J8 3.3V
J9 5V
J11 BATT
J36 POWER
J35 5V 3V3 GND
Optional soft-switched 5V Step-Down Regulator
U4 TPS562200
12V-filtered
C6 10uF
C8 10uF
C11 100nF
L2 3.3...4.7uH
C13 22uF
C15 22uF
R24 54.9k
R25 10k
+5V
R16 10k
R17 10k
IO-EN5V
JP2 3V3to5V
GPIO/ADC (optional input filters) DO NOT SOLDER Z-DIODE when used as output
J16 IA IA
J17 IA IOA
J18 IOA IOD
J19 IOD IO
J20 IO* IO*
J22 IO* IO*
IO1
IO2
IO3
IO4
IO5
IO6
IO7
IO8
IO9
IO10
IO11
IO12
C16 100nF
C17 100nF
C18 100nF
C19 100nF
C20 100nF
D7 3V6
D8 3V6
D9 3V6
D10 3V6
D11 3V6
R29 10k
R30 10k
R31 10k
R32 10k
R33 10k
R34 10k
R35 10k
R36 10k
R37 10k
R38 10k
R44 10k
R45 10k
R43 10k
R42 10k
R41 10k
R49 10k
R50 10k
R48 10k
R47 10k
R46 10k
D18 3V6
D19 3V6
D17 3V6
D16 3V6
D15 3V6
C24 100nF
C25 100nF
C23 100nF
C22 100nF
C21 100nF
R55 10k
R56 10k
R57 10k
R58 10k
D21 3V6
D22 3V6
C26 100nF
C27 100nF
+3V3
C3 100nF
C4 1uF
R1 10k
U1
espEN
Input ADC IO1
Input ADC IO2
1nF
SW1 RESET
EN
SENSOR_VP
SENSOR_VN
VDD
IO0 espIO0
TXD0/IO1 TXD0
IO2 ST_b
RXD0/IO3 RXD0
IO4 ST_d
IO5 IO12 RS485_Rx mos2
IO12 IO10 buzzer must be low at boot
IO13 relais
IO14 IO9 RS485_DE
IO15 ST_a
IO16 ST_c
IO17 IO-EN5V
IO18 IO11 mos1
IO19 DS1
IO21 DS2 RS485_Tx
IO22 SCL
IO23 SDA
IO25 IO6 DAC1
IO26 IO7 DAC2
IO27 IO8
IO32 IO4 ADC
IO33 IO5 ADC
IO34 IO3 ADC Input
IO35 7ADC-batt ADC Input
SD0/SD0
SD1/SD1
SHD/SD2
SWP/SD3
SCK/CLK
SCS/CMD
GND
ESP32-WROOM-32D
1x Relais 230VAC 10A
relais
R9 10k
R12 200
R20 200
D3 LED
D4 D
Q1 Si2302
U5 LEG-12
coil
NO
com
NC
F1 fuse
J14 RELAIS
RS485
U6 MAX485E
RS485_Rx
RS485_DE
RS485_Tx
0 R73
nopop R69 100k
VCC
RO
RE
DE
DI
B
A
R71 nopop 720
R70 120
R72 nopop 720
rs485_N
rs485_P
485 J39
Battery voltage sensing
R14 100k
R15 24k
C9 100nF
ADC-batt
2x Power Mosfet 30V 15A
D6 D
D13 D
J15 mos2
J21 mos1
mos2 500 R67
mos1 500 R68
R61 22k
R62 22k
Q4 IRF7455
Q5 IRF7455
Buzzer/LED
R65 120
R59 0
D23 LED
BZ1 Buzzer
R54 1k
R53 10k
buzzer
J33
select
Q7 Si2302
UART bus (with connections to IO0 and EN for programming ESP32)
R5 10k
J4 UART
RXD0
TXD0
espIO0
espEN
JP1 3V3_SEL
SW2 BOOT
1x I2C Bus with two connectors
J5 IIC
J6 IIC
R2 2k2
R8 2k2
SDA
SCL
+5V
2x 1-Wire Bus
U2 DS18B20
GND VDD DQ
DS1_bus
DS1
DS2
R10 1k5
R18 200
R11 1k5
R19 200
J12 DS1
J13 DS2
Probe points
J26 5V
J27 3v3
J28 GND
J29 GND
4x Low Power Mosfet 20V 2.5A with Fly-Back diodes and connectors for 4x RC servos or 1x unipolar stepper motor
ST_a
ST_b
ST_c
ST_d
ST_com
ST_1
ST_2
ST_3
ST_4
R21 22k
R26 1k
R27 22k
R28 1k
R39 22k
R40 1k
R51 22k
R52 1k
D5 D
D12 D
D14 D
D20 D
R60 2k2
R63 2k2
R64 2k2
R66 2k2
Q2 Si2302
Q3 Si2302
Q6 Si2302
Q8 Si2302
J30 Servo1
J31 Servo2
J32 Servo3
J34 Servo4
J23 stepper
J24 stepper
J25 stepper
M1 stepper
M2 stepper
J1 schraube
J10 schraube
J37 schraube
J38 schraube
Sheet: /
File: esp32-mehrzweckboard1.sch
Title:
Size: A3
Date:
Rev:
KiCad E.D.A. kicad 7.0.10
Id: 1/1